

MINI F-T

Item code	**86.D103.5231.02**
Product type	**Indoor**
Category	**Downlights**
Family	**MINI**
Subfamily	**MINI F-T**
Pictograms	CRI 90 · CE · Driver INCL. · On Off · DALI · IP 20

Dimensions	
Product dimensions (mm)	**ø78.5*H150.5mm**

Product	
Real power (W)	**10**
Real luminous flux (Lm)	**840**
Luminous efficiency (Lm/W)	**84**
Beam angle (º)	**36**
Life time (h)	**50000 h L80B10**
IP	**20**
Control gear	**ON/OFF**
Colour temperature (K)	**2700**
Colour consistency (SDCM)	**SDCM3**
CRI	**90**

Scheme

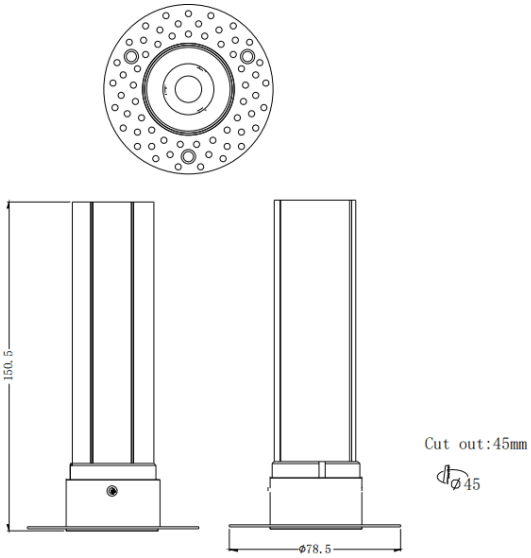

Photometry

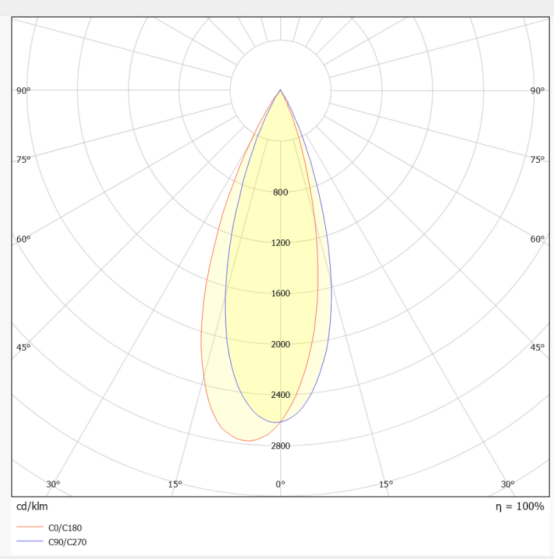
90°
90°
75°
75°
60°
60°
45°
45°
800
1200
1600
2000
2400
2800
30°
15°
0°
15°
30°
cd/klm
η = 100%
C0/C180
C90/C270